LDA100S SERIES
100W SINGLE OUTPUT LED POWER SUPPLY

Features

* Universal Input Range 90~305VAC
* Built-in active PFC function
* High efficiency up to 92%
* 4KV surge protection
* UL8750, EN61347, EN62384 approved
* Harmonic meet EN61000-3-2 Class C
* Short Circuit/Over Voltage/Over temperature Protection
* IP67 design for indoor or outdoor installations
* Suitable for LED Street Lighting applications
* Dimming Function (Optional): 1-10Vdc and Resistance or DALI and Touch-dim
* No Load Power Consumption<0.5W(Note 8)
* 5 Years Warranty

Ordering information

Model No.	Optional type
LDA100SXXX	-XX

01: Constant Current Mode (IP67)
No dimming

03: Constant Current Mode (IP67)
Dimming: 1~10Vdc and Resistance

04: Constant Current Mode (IP67)
Dimming: DALI

MODEL	Output Voltage (No Load)	Output Current NOTE 7	Ripple & Noise NOTE 1	Voltage Accuracy NOTE 2	Line Regulation NOTE 3	Load Regulation NOTE 4	Constant Current Region	Effciency (Typical.) NOTE 5
LDA100S142	142V	0.70A	0.5%	±1%	±1%	±2%	71~140V	92%
LDA100S214	214V	0.5A	0.5%	±1%	±1%	±2%	107~211V	92%
LDA100S214A	214V	0.35A	0.5%	±1%	±1%	±2%	107~211V	90%

Specifications

INPUT SPECIFICATIONS:

Voltage ..... 90~305VAC
Frequency ..... 47~63Hz
Inrush Current ..... Cold start@25℃ 100A max. @240Vac
Leakage Current ..... 0.75mA max.
Power Factor ..... .PF>0.98/115VAC, PF>0.93/230VAC @ full load
Input Current ..... 1.2A typ. @115Vac/0.55A typ. @230Vac
0.5A typ. @277Vac

OUTPUT SPECIFICATIONS:

Holdup Time ..... 12ms typ. @115Vac
Short Circuit Protection ..... Auto Recovery
Over Voltage Protection ..... Recycle AC input to restart
Over Current Limit (note6) ..... Constant Current mode
Over Temperature Protection ..... Yes
Startup time (note9) ..... 0.5s max.
Temperature Coefficient ..... ±0.05%/℃

GENERAL SPECIFICATIONS:

Isolation Voltage ..... Input to output = 3750VAC
Isolation Resistance ..... 100MΩ min.
Operating Temperature ..... -40 ~ 70℃(see Drating Curve)
Storage Temperature ..... -40~85℃
Humidity ..... 20 ~ 95% RH Non condensing
Cooling ..... Natural Convection
Switching Frequency ..... 65kHZ typ.
MTBF ..... MIL-HDBK-217F, GB, 25℃ ..... 180Khrs typ.
Vibration.....15~2000Hz 4G period for 60min,each along X Y Z axes
Altitude 2000m
Dimensions 210x58x35mm (8.268x2.283x1.378Inches)
Weight .....750g Typical

SAFETY AND EMC:

Emission and Immunity ..... EN61547, EN55015, CISPR22 Class B
EN61000-3-2, EN61000-3-3, EN61000-4-2,3,4,5,6.8,11
Harmonic Current ..... EN61000-3-2 Class C(>50% load)
Surge 4KV
Safety (note10) UL8750,EN61347-1,EN61347-2-13 EN62384

LDA100 Series De-rating Curve

1~10V Dimming function for output current curve:

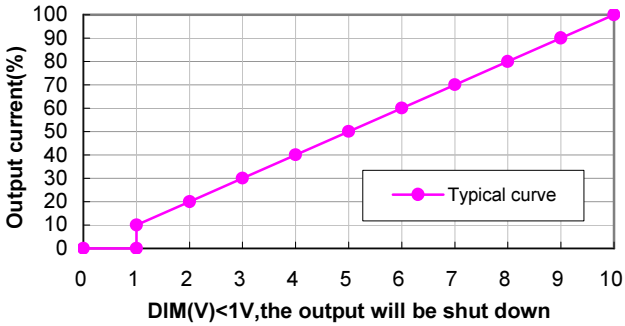

DIM(V)<1V,the output will be shut down

Derating curve:

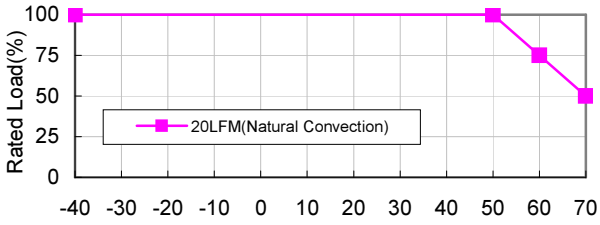

Ambient Temperature(°C)

NOTE:

1. Add a 0.1uF ceramic capacitor and a 10uF E.L. capacitor to output for Ripple & Noise measuring @20MHz BW with 95% Rated current.
2. Voltage accuracy is set of 90% rated current.
3. Line regulation is measured from high line to low Line with 90% rated current.
4. Load regulation is measured from 90% to 10% Rated current.
5. Efficiency is measured 95% rated power at Vin=230VAC.
6. Less than 50% (typ.) of the rated output voltage will enter hiccup mode.
7. Output Constant Current Accuracy ±5%.
8. No load power consumption<0.5W for LDA100SXXX-01.
   No load power consumption<1.5W for LDA100SXXX--03, 04.
   Stand by power consumption<0.5W for LDA100SXXX-03, 04,.
9. Startup interval must be greater than 3 seconds.
10. LDA100SXXX-03 UL only.

Mechanical Specification

All Dimensions In Inches[mm]
Tolerance Inches:x.xxx = ± 0.02
Millimeters:x.xx = ± 0.5

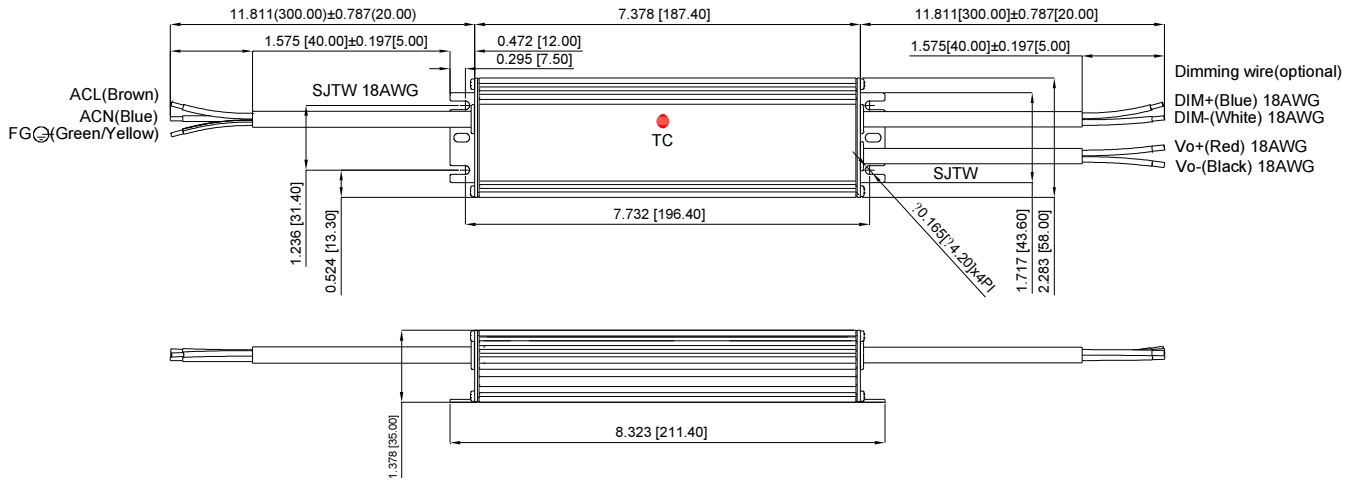

Typical at 25˚C, nominal line and 75% load, unless otherwise Specified